HJDS Series

The DOMINATOR

Hazardous Location Lighting

Solas Ray™ Lighting
5935 West 84th St. | Indianapolis, IN 46278 | 1-800-840-5635 | www.SolasRay.com

Cat. #	Type
Notes	

Haz Loc HAZARDOUS LOCATION

High Vibration RESISTANCE

CERTIFICATIONS / RATINGS

ETL C US LISTED · UL844 MARINE UL 1598 A · IP66 · DLC LISTED * · IK10 IMPACT RATING · ABS energy API · IEC · IECEx · Ex

CLASS / DIVISION

- Class I, Div 1, Groups C, D
- Class II, Div 1, Groups E, F, G
- Class III
- Class I, Div 2, Groups A, B, C, D
- Class II, Div 2, Groups F, G

KEY FEATURES AND BENEFITS

- Corrosion proof – Coated aluminum alloy (copper free) housing.
- *DLC V51. Standard (4000K/5000K with 120° beam angle only).
- Internal EM battery option (15W / 90 min).
- Marine rated corrosion resistant powder coat.
- 20w / 40w / 60w / 80w models are pendant mount ready (3/4" npt).
- Paint / Spray listed for use in paint or powder-coat booths.
- Stainless steel hardware and bracket.
- 3 connection cable entry points.
- Heavy duty and high impact resistance.

SPECIFICATIONS

Voltage	120-277vAC / 200-480vAC
Wattage	20w / 40w / 60w / 80w / 100w / 150w / 200w
Ambient Temperature	-40°C (-40°F) to 55°C (131°F) (-10°C to 55°C with EM Battery)
Housing	Coated copper free aircraft aluminum
Color	Gray
Lens	Flat tempered glass + polycarbonate beam angle lens

Efficacy	>140 lm/w
Lifetime	70,000 hrs L_{70}
CRI	80
Color Temp	4000 / 5000 Kelvin
Beam Angle	40° / 60° / 90° / 120° (standard)
Power Factor	>0.90
Warranty	5 Year Limited Warranty - Fixture 3 Year Limited Warranty - Battery

LUMENS

20W	40W	60W	80W	100W	150W	200W
2,800	5,600	8,400	11,200	14,000	21,000	28,000

PRODUCT ORDERING SELECTION

HJDS1 – [ ] – [ ] – [ ] – [ ] – [ ] – [ ]

Series
☑ HJDS1

Watts
☐ 020 - 20w
☐ 040 - 40w
☐ 060 - 60w
☐ 080 - 80w
☐ 100 - 100w
☐ 150 - 150w
☐ 200 - 200w

Kelvin
☐ 40 - 4000K
☐ 50 - 5000K (std)

Voltage
☐ U - 120-277vAC
☐ 48 - 200-480vAC

Beam Angle
☐ 40 - 40°
☐ 60 - 60°
☐ 90 - 90°
☐ 120 - 120° (std)

Mounting Options
☐ HJUB - Universal Bracket (included standard)
☐ TSF - Tenon Slip Fitter

20w / 40w / 60w / 80w models feature a 3/4" npt connection for pendant mounting (standard)

Other Options
☐ EM - Emergency Battery Backup - 15W (120-277VAC models only)

Specifications and data are subject to change without notice.

HJDS Series

The DOMINATOR

SOLAS RAY™ LIGHTING
5935 West 84th St. | Indianapolis, IN 46278 | 1-800-840-5635 | www.SolasRay.com

MOUNTING OPTIONS

#HJUB - Universal Bracket	#TSF - Tenon Slip Fitter	Pendant Mounting Capable
Universal bracket may be used for ceiling or wall mounting Examples of wall mounting. 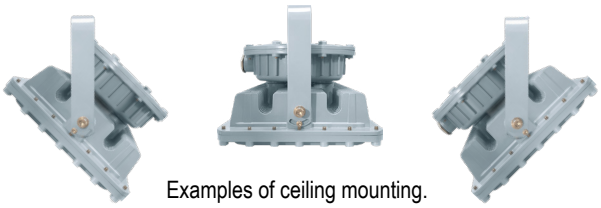 Examples of ceiling mounting.	Fits standard 2-3/8" tenon.. 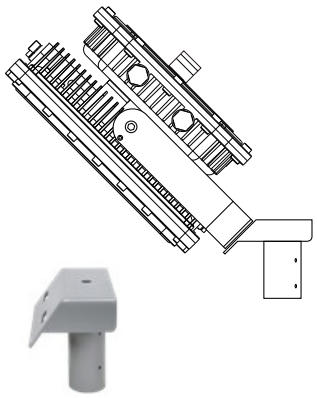	PENDANT MOUNTING 20w / 40w / 60w / 80w models only These models can be pendant mounted using the built in 3/4" NPT connection (included standard.) 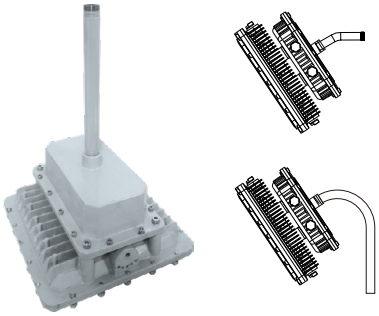 Examples using pendant mount. (Pendant pipe not included.)

WEIGHTS AND DIMENSIONS

WEIGHTS

Model	Weight
20w / 40w / 60w / 80w	15.5 lb
100w / 150w / 200w	30.5 lb

20w / 40w / 60w / 80w MODELS

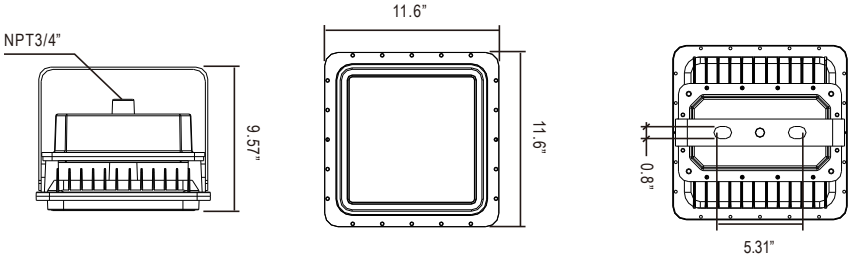

100w / 150w / 200w MODELS

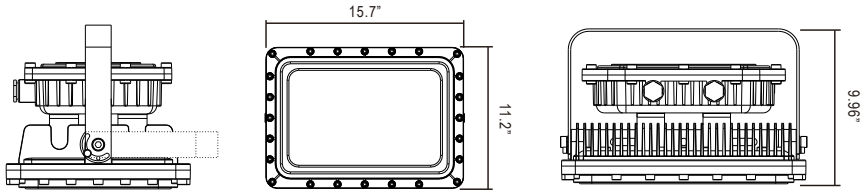

EM BATTERY OPTION (INTERNAL)

Available for 120-277VAC models only.

Input Rating	AC 120-277V
Output Wattage	15W
Battery Capacity	2000 mAh
Battery Run-time	90 minutes
Charge Time	≥ 24 hours
Ambient Temperature	-10°C (14°F) to 60°C (140°F)
Battery Warranty	3 Year Limited Warranty

CE RoHS compliant c UL us Type HL

Specifications and data are subject to change without notice.